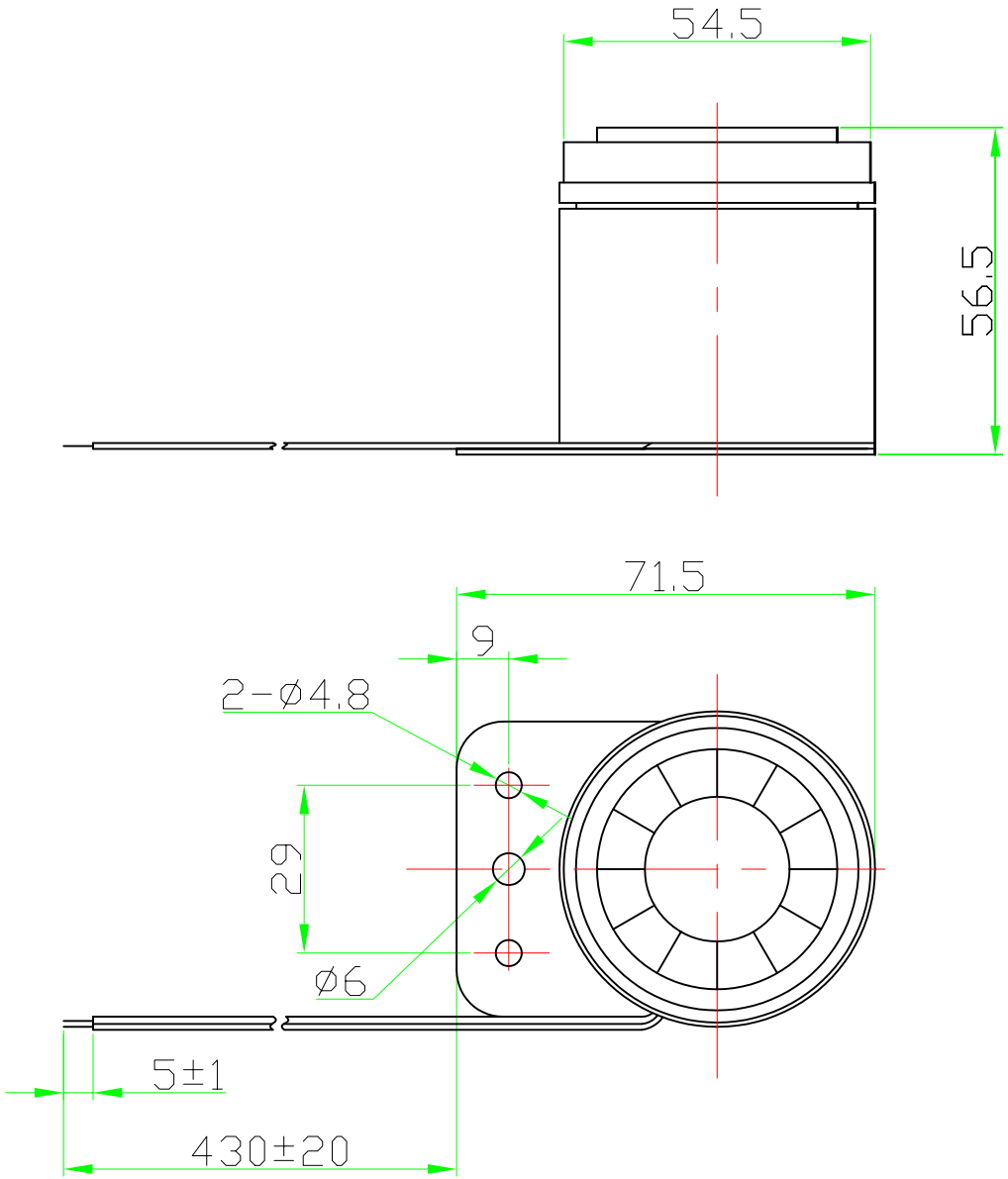

Specification (Test Condition, 25℃)

1. Housing Material/ Color..... ABS / Black
2. Power Rating RMS ..... 10 W
3. Power Rating Peak ..... 15 W
4. Rated Voltage ..... 12 VDC
5. Range Voltage ..... 6--15 VDC
6. S.P.L. ..... 105±3 dB(at 1 meter, 12VDC)
7. Resonant Frequency 1.5-4.0KHz
8. Tone Nature ..... Siren
9. Current Draw ..... 300 mA Max.(at 12 VDC)
10. Load Test ..... 8 Hours (at 12 VDC)
11. Heat Test ..... 8 Hours (at 85℃)
12. Operating Temperature range ..... -20 ~ +85℃
13. Wires Connection ..... Red +12V
    ..... Black GND
14. Weight ..... 110 ±10 g

No.	DESCRIPTION	APPROVED	DATE

TOLERANCES UNLESS NOTED OTHERWISE
.X ±
.XX ±
.XXX ±
90° FORMED +2° ANGLES -1°

FIRST ANGLE PROJECTION

APPROVALS	DATE
DRAWN	
CHECKED	
APPROVED	04.02.14

DSW NINGBO DSW AUDIO & SECURITY EQUIPMENT
http://www.dswbrand.com

Piezo Alarm
EPA-55S1

UNIT	DWG NO.	
mm	E7.840.002	
SCALE NOT TO SCALE	SHEET	VER 1.0