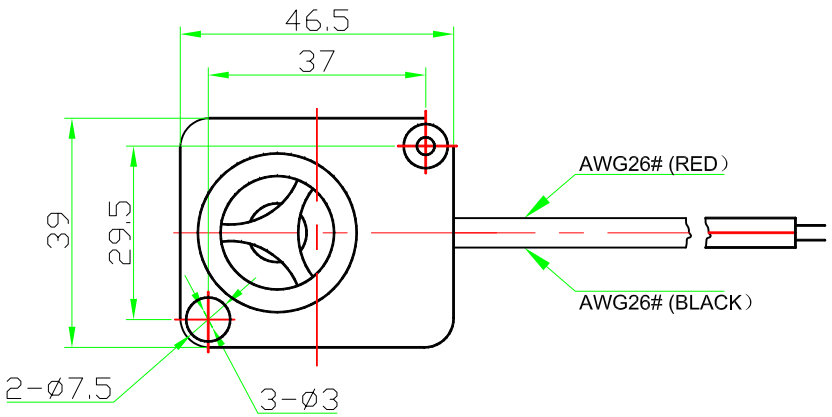

Specification (Test Condition, 25℃)

1.Housing Material/ Color ..... ABS / Black
2.Rated Voltage 12VDC
3.Operating Voltage ..... 6~15VDC
4.Max. Rated Current ..... 80mA at 12VDC
5.Min. Sound Pressure Level ..... 110dB at 12VDC/30cm
6.Tone Nature ..... Siren
7. Load Test .....8 Hours (at 12 VDC)
8. Heat Test ..... 8 Hours (at 85℃)
9. Operating Temperature range ..... -20 ~ +85℃
10.Operating Temperature ..... -20~+60℃
11.Store Temperature ..... 30~+70℃
12.Weight 35g

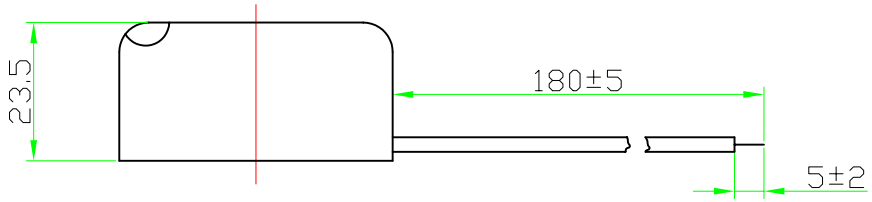

No.	DESCRIPTION	APPROVED	DATE

TOLERANCES UNLESS NOTED OTHERWISE
.X ±
.XX ±
.XXX ±
90° FORMED +2° ANGLES -1°

FIRST ANGLE PROJECTION

APPROVALS	DATE
DRAWN	
CHECKED	
APPROVED	04.02.14

DSW NINGBO DSW AUDIO & SECURITY EQUIPMENT
http://www.dswbrand.com

Piezo Alarm
EPA-47

UNIT mm | DWG NO. E7.840.004
SCALE NOT TO SCALE | SHEET | VER 1.0