Specification (Test Condition, 25℃)

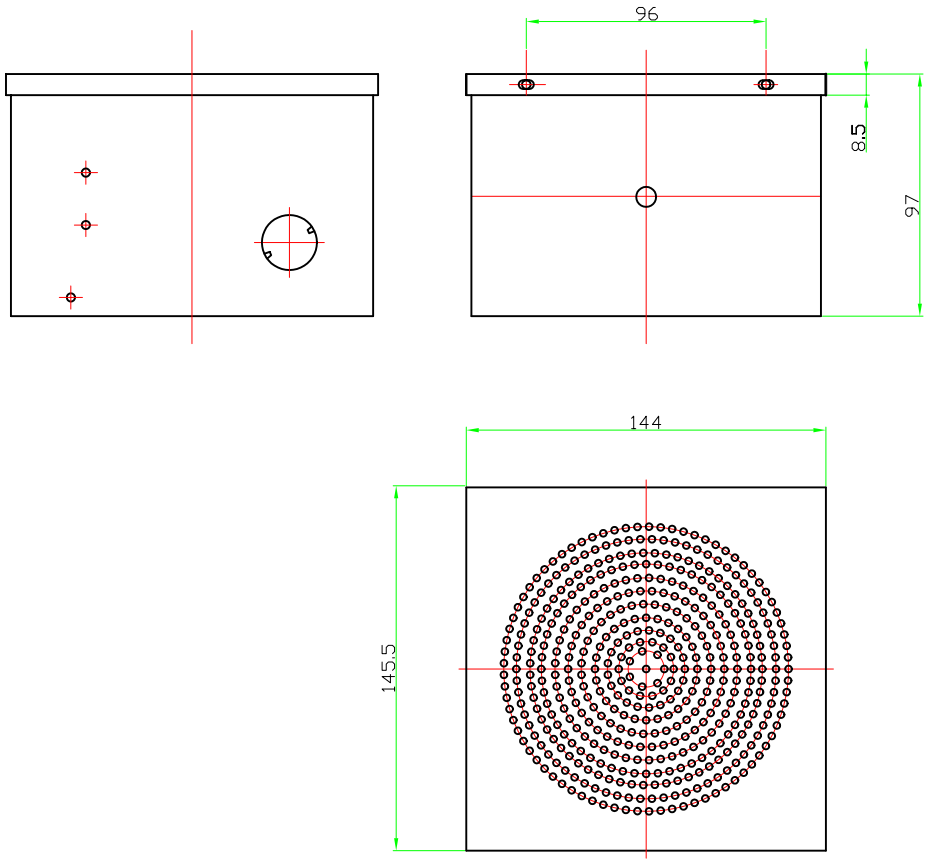

1. Outer Metal Housing Material/ Color ..... Stainless Steel / Silver
   Inner Plastic Housing Material/ Color ..... ABS / Black
2. Voice Coil Impedance ..... 6 Ohm (at 1 KHz)
3. Voice Coil Dimension ..... Ø 25.4 mm(Dia.)
4. Magnet Size ..... Ø60*32*10 mm(Dia.* dia.*H)
5. Rated Voltage ..... 12 VDC
6. Range Voltage ..... 6 --15 VDC
7. S.P.L. ..... min. 108 dB(at 1 meter, 12VDC)
8. Tone Nature ..... Warble / Continuous
9. Current Draw ..... 650 mA Max.(at 12 VDC)
10. Load Test ..... 8 Hours (at 12 VDC)
11. Heat Test ..... 8 Hours (at 60℃)
12. Operating Temperature range ..... -20 ~ +60℃
13. Wires Connection ..... Red +12V (Warble)
    ..... Yellow +12V (Continuous)
    ..... White GND
    ..... White (Switch)
14. Weight ..... 1070±20 g

No.	DESCRIPTION	APPROVED	DATE

TOLERANCES UNLESS NOTED OTHERWISE
.X ±
.XX ±
.XXX ±
90° FORMED +2° ANGLES -1°

FIRST ANGLE PROJECTION

APPROVALS	DATE
DRAWN	
CHECKED	
APPROVED	04.01.12

DSW NINGBO DSW AUDIO & SECURITY EQUIPMENT
http://www.dswbrand.com

Armored Siren
EAS-144

UNIT	DWG NO.	
mm	E5.840.005	
SCALE NOT TO SCALE	SHEET	VER 1.0