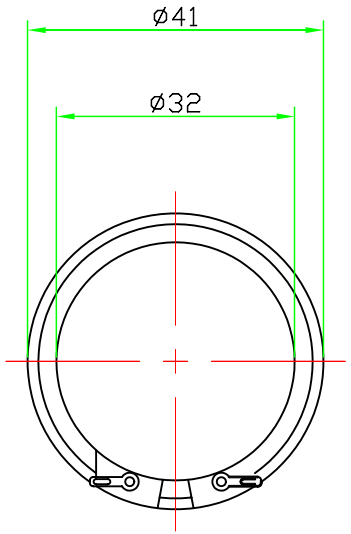

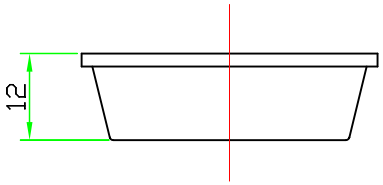

SPECIFICATION

1.Rated Voltage 10Vp-p
2.Max.Rated Input Voltage 30Vp-p
3.Min. Sound Pressure Level .....80±3dB/w.m
4.Rated Frequency.....22±3KHz
5.Rated Frequency Range.....2.5-50KHz
6.Shell Material/Color .....PBT/Black
7.Operating Temperature .....-20～+70℃
8.Store Temperature .....-30～+80℃
9.Weight 5g

No.	DESCRIPTION	APPROVED	DATE

TOLERANCES UNLESS NOTED OTHERWISE
.X ±
.XX ±
.XXX ±
90° FORMED +2°
ANGLES -1°

FIRST ANGLE PROJECTION

APPROVALS	DATE
DRAWN	
CHECKED	
APPROVED	03.12.16

DSW NINGBO DSW AUDIO & SECURITY EQUIPMENT
http://www.dswbrand.com

Piezo Tweeter
PCT-4000

UNIT	DWG NO.	
mm	E8.840.005G	
SCALE NOT TO SCALE	SHEET	VER 1.0