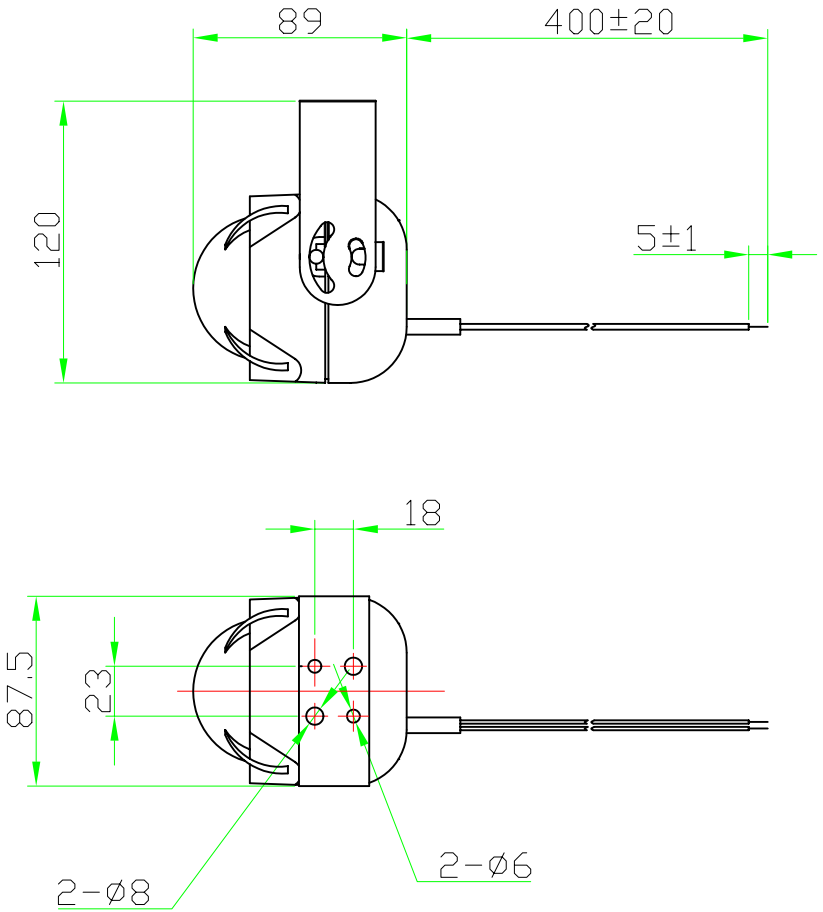

Specification (Test Condition, 25℃)

1. Housing Material/ Color..... ABS / Black
2. Voice Coil Impedance ..... 6 Ohm (at 1 KHz)
3. Voice Coil Dimension ..... Ø25.4 mm(Dia.)
4. Magnet Size ..... Ø60*32*10 mm(Dia.* dia.*H)
5. Power Rating RMS 15W
6. Power Rating Peak ..... 20 W
7. Rated Voltage ..... 12 VDC
8. Range Voltage ..... 6--14 VDC
9. S.P.L. ..... min. 110 dB(at 1 meter, 12VDC)
10. Tone Nature ..... Siren
11. Current Draw ..... 1300 mA Max.(at 12 VDC)
12. Load Test ..... 8 Hours (at 12 VDC)
13. Heat Test ..... 8 Hours (at 85℃)
14. Operating Temperature range ..... -20 ~ +85℃
15. Wires Connection ..... Red +12V
    ..... Black GND
16. Weight ..... 360 ±10 g

No.	DESCRIPTION	APPROVED	DATE

TOLERANCES UNLESS NOTED OTHERWISE
.X ±
.XX ±
.XXX ±
90° FORMED ANGLES +2° -1°

FIRST ANGLE PROJECTION

APPROVALS	DATE
DRAWN	
CHECKED	
APPROVED	04.01.17

DSW NINGBO DSW AUDIO & SECURITY EQUIPMENT
http://www.dswbrand.com

Electron Siren
ES-88U1(20W)

UNIT	DWG NO.	
mm	E1.840.015	
SCALE NOT TO SCALE	SHEET	VER 1.0